卷册检索号 SEARCH NO. OF THE VOLUME
MLHVDC-LCS-ECI-DD-CS-0307 30-B003701S-T0307

第 1 页 共 1 页
PAGE 1 OF 1

图纸文件目录（首页）

CATALOG OF DRAWING DOCUMENTS (HEAD PAGE)

拉合尔±660kV换流站 工程 施工图 阶段
±660kV Lahore Converter Station PROJECT Detail Design DESIGN STAGE

结构 专业 第 03 卷 第 07 册
Structure SPECIALITY VOLUME 03 BOOK 07

卷册 名称 直流中性母线塔基础图(第一次修改)
Volume name Foundations for DC Neutral Bus-bar Tower(First revision)

批 准 APPROVED BY	
审 核 REVIEWED BY	
设计/勘测 DESIGNED BY/ SURVEYED BY	古韬城
图纸 2 张 DRAWING 2 NOS.	打印件 0 本 PRINTED COPIES 0 NOS.

序号 No.	图 号 DRAWING NO.	文件名称 DOCUMENT TITLE	版本 EDITION	张 NOS.	本 NOS.	备注 REMARKS
1	30-B003701S-T0307-001	直流中性母线塔基础布置图 layout of foundations for DC Neutral Bus-bar Tower	B	1		
2	30-B003701S-T0307-002	基础F－1详图 detail of foundation F-1	B	1		

注:

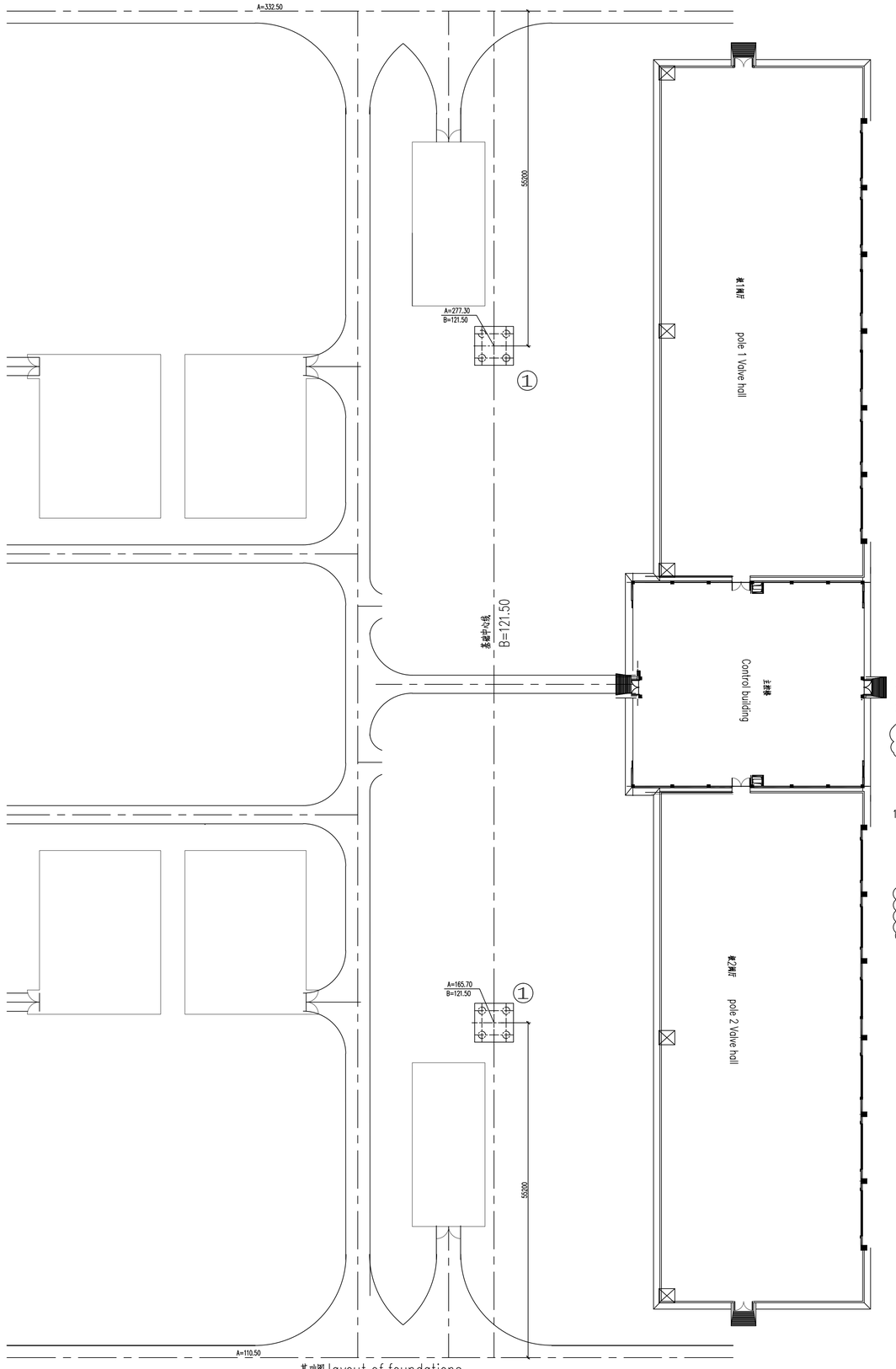

基础图 layout of foundations

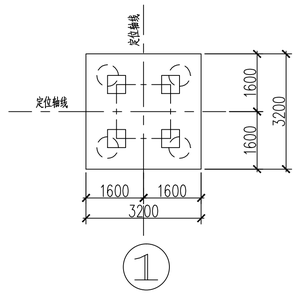

承台布置图

layout of foundations

LISTS OF FOUNDATION 基础工程量

NO. 编号	NAME 代号	QTY 数量	DRAWING NO. 施工图号	volume基础工程量(m3)	
				PCS单个	SUM总计
①	F-1	2	30-B003701S-T0307-002	11.30	22.60

说明:

1. 场地±0.000相当于绝对标高193.40(EGM2008高程系统).如无特别说明,本工程标高均采用相对标高.
2. 本工程基础采用柱下独立承台+灌注桩的形式,桩为Φ600的机械成孔灌注桩.
3. 本工程初设设计尚未最终审定,最终方案有存在调整可能,是否按图施工由总包CET决定,由此造成的变更设计不予负责。 B

Specification:

1. The site level of ±0.000 is equal to the absolute elevation of193.40 (geodestic datum system EGM2008) If not specified,the elevations of the project are adopt to the relative elevation.
2. The foundation of this project adopts the form of independent cap and filling pile under column. The pile is a bored cast-in-place pile with a diameter of 600.
3. As the preliminary design documents have not yet been approved finally, the project solution has probability to be modified.The design contractor has no responsibility for the project solution changed, if the construction contractor does not get authorized by CET before construction. B

Reference Drawings

Drwg. No.	Title

Revisions

	Name	Date	Notes
B	古韬城	20181213	根据图纸审查意见，调整螺栓、锚板详图
A	古韬城	20171205	新制

巴基斯坦默蒂亚里-拉合尔±660kV直流输电工程

±660kV HVDC Project from Matiari to Lahore in Pakistan

NATIONAL TRANSMISSION & DESPATCH COMPANY (NTDC) LIMITED PAKISTAN

CONTRACTOR 国家电网 STATE GRID 中国电力技术装备有限公司 CHINA ELECTRIC POWER EQUIPMENT AND TECHNOLOGY CO.,LTD.

SUBCONTRACTOR East China Electric Power Design Institute Co.,Ltd.

拉合尔±660kV换流站

±660kV Lahore Converter Station

设计阶段 PHASE: 施工图 Detail Design

M L H V D C - L C S - E C I - D D - C S - 0 3 0 7 - 0 0 1 B

	姓名 Name	日期 Date
设计 Designed	古韬城	20181213
校核 Checked	毛惠平	20181213
审核 Reviewed	谷清清	20181213
批准 Approved	杨小平	20181213

电气	古韬城	20181213
专业 Speciality	会签 Sign	日期 Date

直流中性母线塔基础布置图

layout of foundations for DC Neutral Bus-bar Tower

比例 Scale: 1:400

图号 DWG NO.: 30-B003701S-T0307-001

版本 REV.: B

594X841

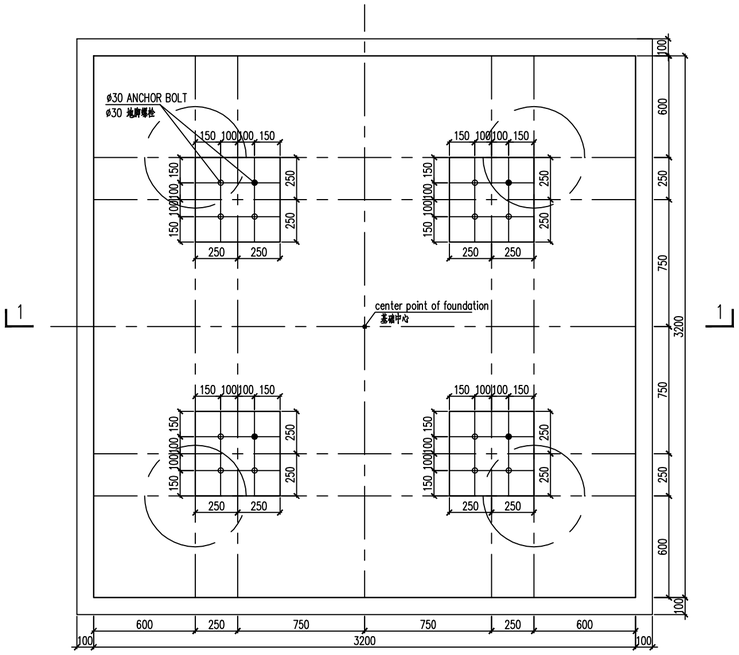

foundation plan 1:10
基础平面图

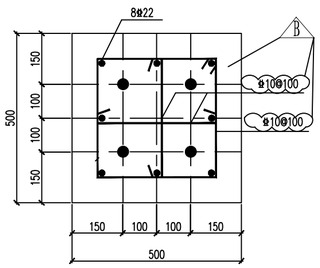

SECTION 2—2 1:5
2—2剖面

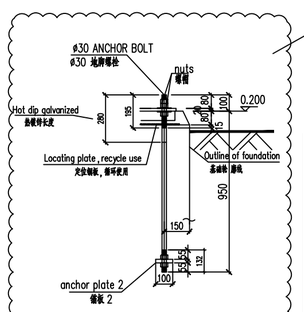

detail for anchor bolt ø30 1:10
螺栓详图

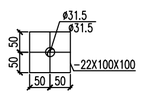

anchor plate 2 1:5
锚板 2

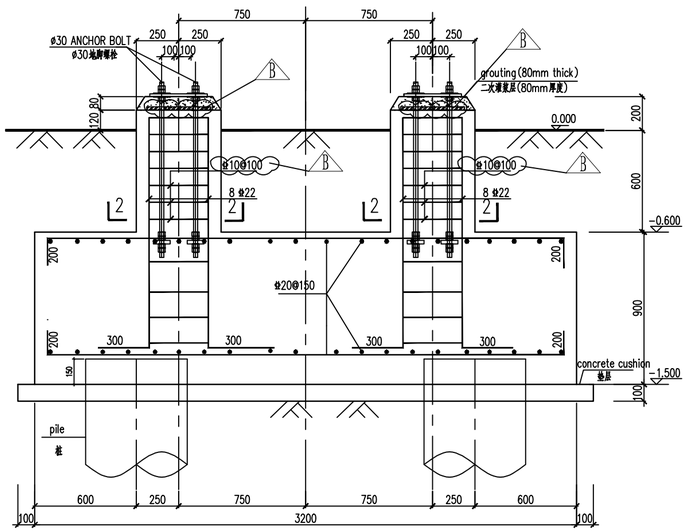

SECTION 1—1 1:10
1—1剖面

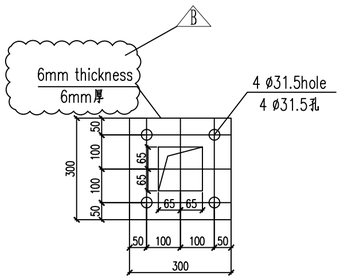

Locating plate
定位钢板

说明：
1. 场地±0.000相当于绝对标高193.40(EGM2008高程系统).如无特别说明,本工程标高均采用相对标高.
2、本工程基础设计依据《巴基斯坦默蒂亚里±660KV直流输电工程拉合尔±660KV换流站施工图设计阶段 岩土工程勘察报告(详勘)》(B003701S-G01-01)进行.
3. 材料
1)混凝土
基础强度等级：fc'=28Mpa
二次灌浆层强度等级：fc'=35Mpa
垫层强度等级：fc'=21Mpa
2)钢筋：业-ASTM A615 Grade 60,Fu=420Mpa
3)锚栓,螺母,垫片,锚板：Q345B,Fy=345Mpa,Fu=470Mpa
锚栓,螺母,垫片,锚板均需热浸锌防腐.
4. 混凝土要求：
1)水胶比不大于0.50；
2)最大氯离子含量(水泥用量的百分比)：0.10；测试方法参《ASTM C 1218M》.
3)水泥型号：采用抗硫酸盐的硅酸盐水泥,水泥型号需满足《ACI 318-14》表19.3.2.1对应于暴露等级S1的水泥种类要求(ASTM C150 或ASTM 595 或ASTM C1157对应的类别)；
4)水泥中掺入矿物掺合料(矿物掺合料的掺量、使用方法和耐腐蚀性能按相应产品的使用说明并经验证后确定).
5. 基础平面图详见 30-B003701S-T0307-001
6. 钢筋保护层厚度为50mm,承台底为150mm.
7. 桩与承台的连接构造参见图集(10SG813)34页：桩顶与承台连接构造,桩内主筋伸入承台长度为40d.
8. 本工程初设设计尚未最终审定,最终方案有存在调整可能,是否按图施工由总包CET决定,由此造成的变更设计不予负责.

Specification：
1. The site level of ±0.000 is equal to the absolute elevation of193.40 (geodestic datum system EGM2008) If not specified,the elevations of the project are adopt to the relative elevation.
2. The foundation design of the project proceeds according to《The geotechnical engineering investigation report(Detail survey) of drawing construction design phase of ±660KV converter station in Lahore in Pakistan Matiari ±660KV HVDC project》(B003701S-G01-01).
3. MATERIALS:
1) CONCRETE:
FOR FOUNDATIONS : SPECIFIED COMPRESSIVE CONCRETE STRENGTH f'c=28Mpa
FOR GROUTING : SPECIFIED COMPRESSIVE CONCRETE STRENGTH f'c=35Mpa
FOR concrete cushion : SPECIFIED COMPRESSIVE CONCRETE STRENGTH f'c=21Mpa
2) STEEL REINFORCING :
业: ASTM A615 GRADE60, MINIMUM YIELD STRENTH Fy=420Mpa
3) ANCHOR BOLTS,NUTS AND WASHERS, anchor plate:
Q345B, MINIMUM YIELD STRENTH Fy=345Mpa .
MINIMUM TENSILE STRENTH Fu=470Mpa .
THE ANCHOR BOLTS, NUTS , WASHERS, anchor plate MUST BE HOT DIP GALVANIZED.
4. Requirements for Concrete:
1) Maximum water-cement ratio is 0.50;
2) Maximum water-soluble chloride ion content is 0.1; Test method refers to "ASTM C 1218M".
3) Type of Concrete: Concrete should be made of sulfate-resistance silica cement. Cement type should fulfill the requirements for concrete used in exposure grade S1, according to《ACI 318-14》table 19.3.2.1.(ASTM C150,ASTM 595 or ASTM C1157 corresponding cement type).
4) Add mineral admixtures (the dosage, using method and anti-corrosion ability should be tested according to the product manual)
5. See Plan for location of Foundations 30-B003701S-T0307-001
6. The minimum concrete cover is 50mm
7. As the preliminary design documents have not yet been approved finally, the project solution has probability to be modified. The design contractor has no responsibility for the project solution changed, if the construction contractor does not get authorized by CET before construction.

Reference Drawings

Drwg. No.	Title

Revisions

	Name	Date	Notes
B	古韶城	20181213	根据图纸审查意见，调整螺栓、锚板详图
A	古韶城	20171205	新制

巴基斯坦默蒂亚里-拉合尔±660kV直流输电工程
±660kV HVDC Project from Matiari to Lahore in Pakistan

NATIONAL TRANSMISSION & DESPATCH COMPANY (NTDC) LIMITED PAKISTAN

CONTRACTOR 国家电网 STATE GRID 中国电力技术装备有限公司 CHINA ELECTRIC POWER EQUIPMENT AND TECHNOLOGY CO.,LTD.

SUBCONTRACTOR East China Electric Power Design Institute Co.,Ltd.

拉合尔±660kV换流站
±660kV Lahore Converter Station

设计阶段 PHASE: 施工图 Detail Design

M L H V D C - L C S - E C I - D D - C S - 0 3 0 7 - 0 0 2 B

	姓名 Name	日期 Date
设计 Designed	古韶城	20181213
校核 Checked	王惠平	20181213
审核 Reviewed	黄建清	20181213
批准 Approved	杨立	20181213

基础F-1详图
detail of foundation F-1

比例 Scale: 1:100
图号 DWG NO.: 30-B003701S-T0307-002
版本 REV.: B

420X594